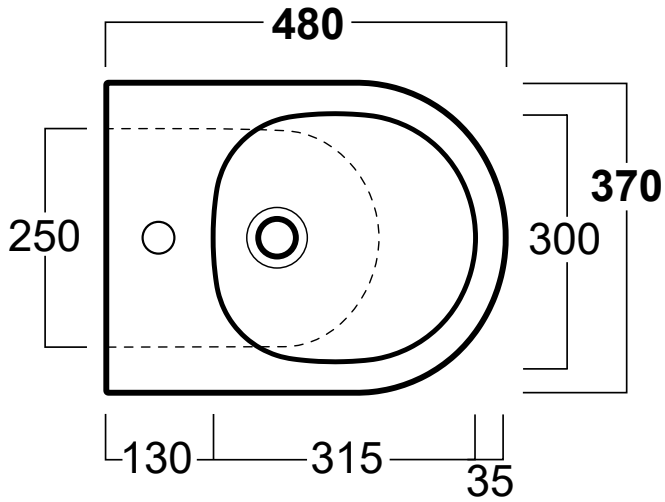

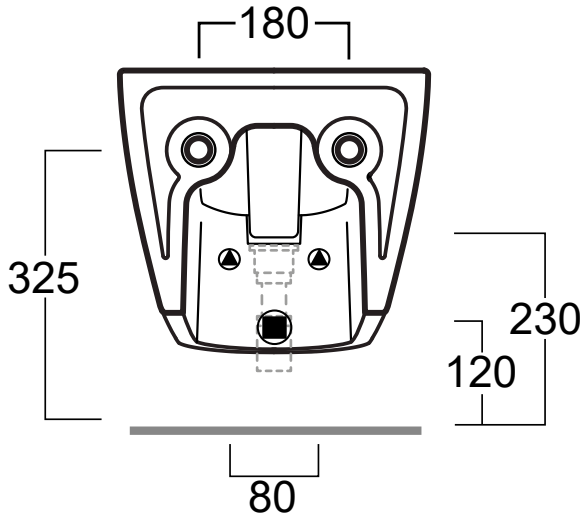

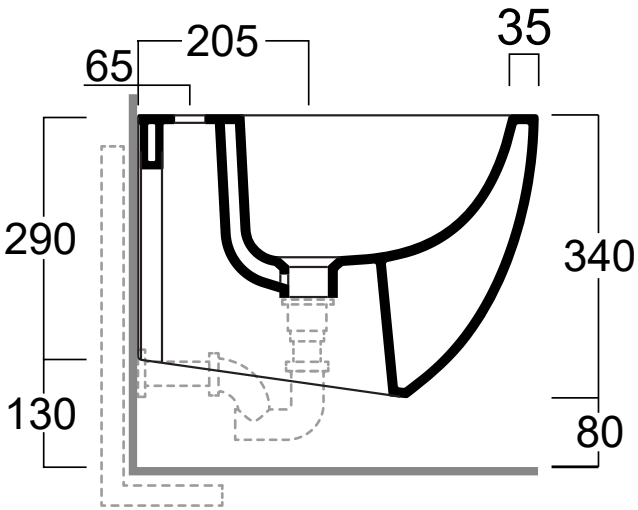

TORTU

TORTU

bidet, compact

TTUVWCVI29

L 480 mm W 370 mm H 340 mm

material: ceramic

weight: 19 kg

tortuworld.com