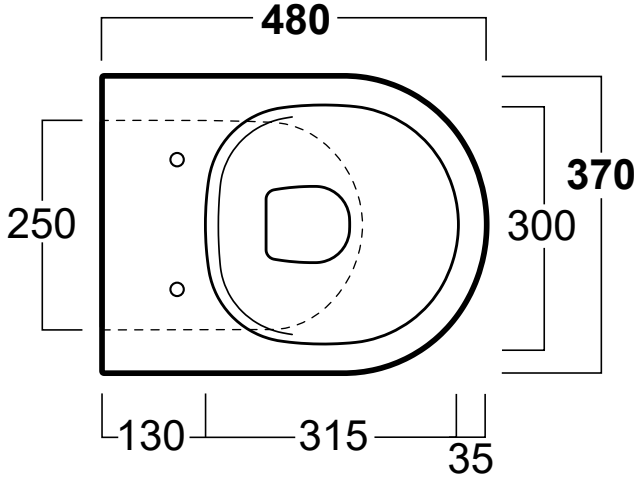

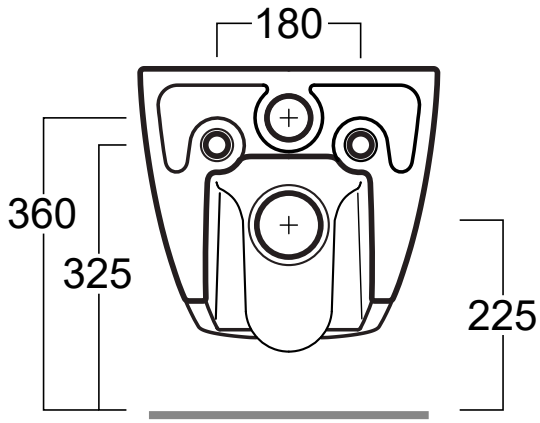

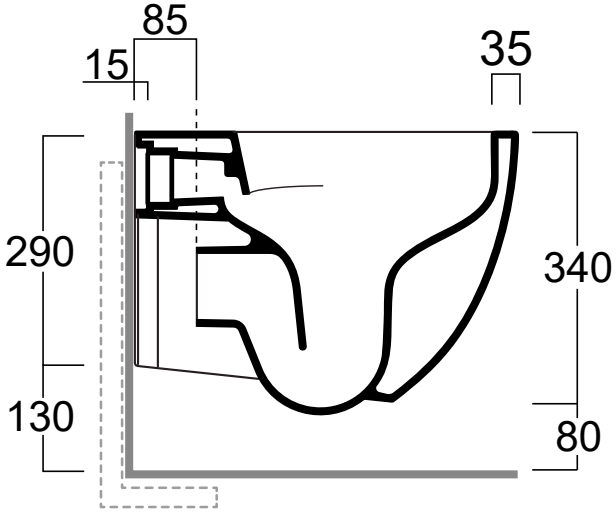

TORTU

TORTU

toilet, compact

TTUVWCVI28

L 480 mm W 370 mm H 340 mm

material: ceramic

weight: 23 kg

tortuworld.com