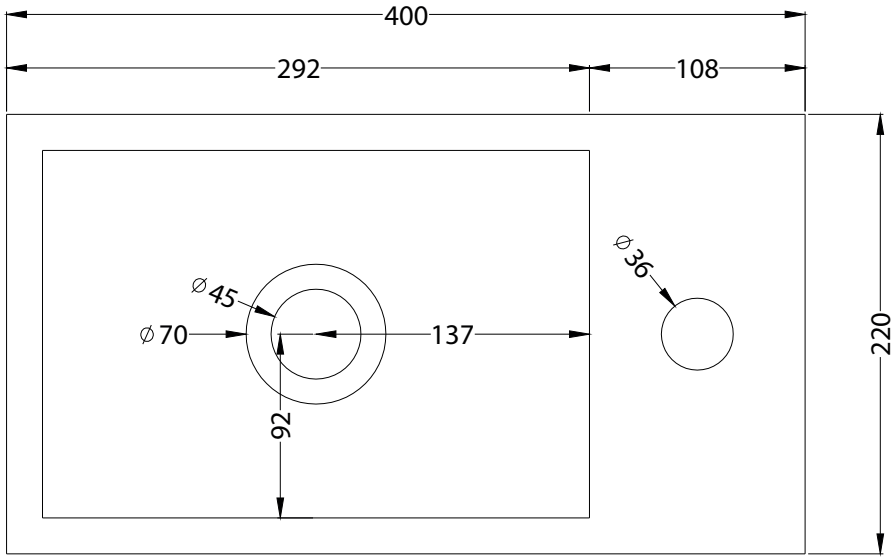

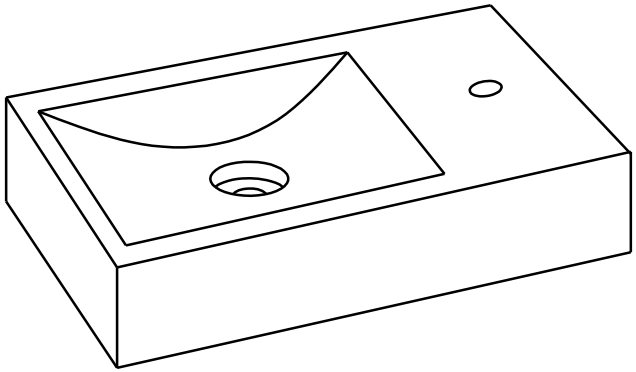

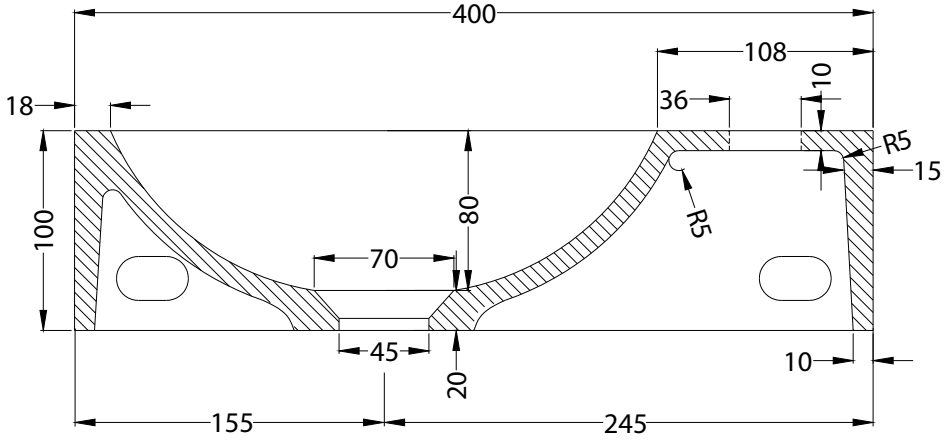

TORTU

BETON

small washbasin

CS-0021F

L 400 mm **H** 220 mm **H** 100 mm

material: concrete

weight: 5,6 kg

tortuworld.com