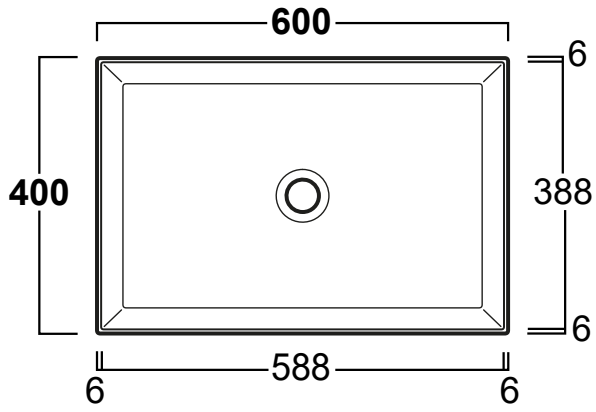

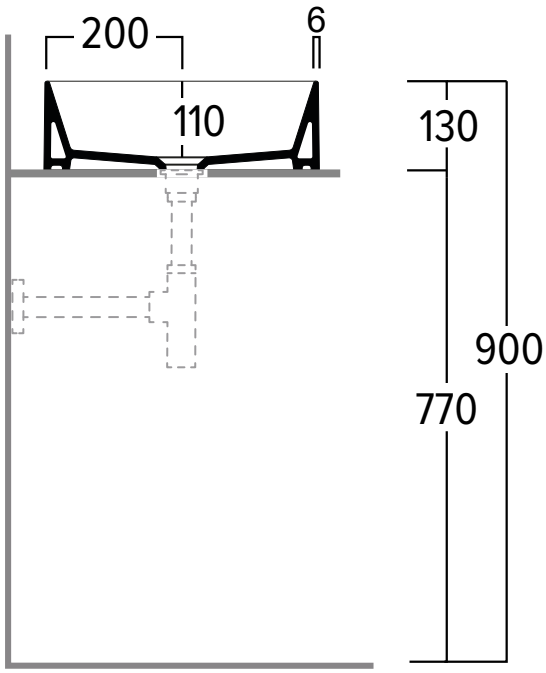

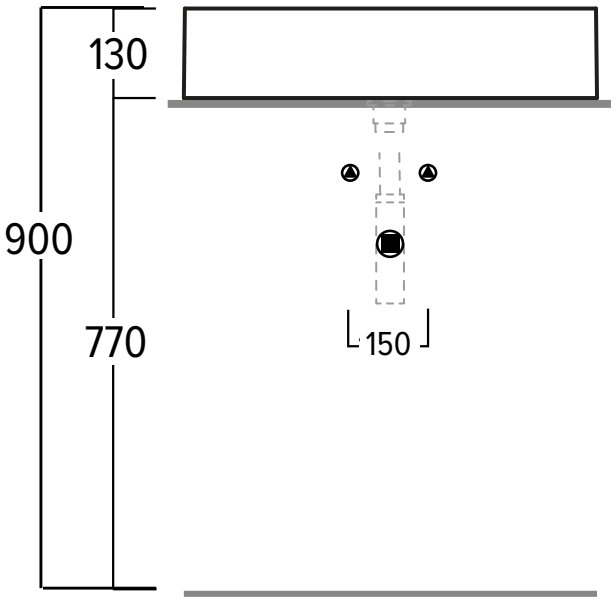

TORTU

FIJI 60

washbasin

TUVAG60

L 600 mm W 400 mm H 130 mm

material: ceramic

weight: 14 kg

tortuworld.com