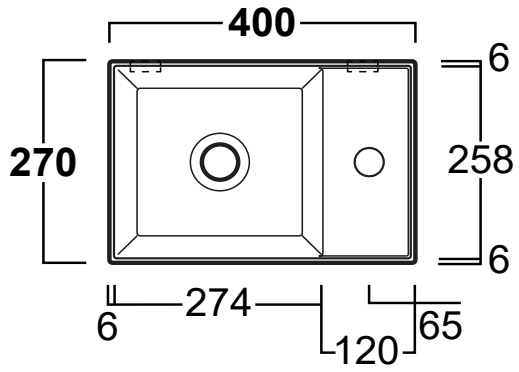

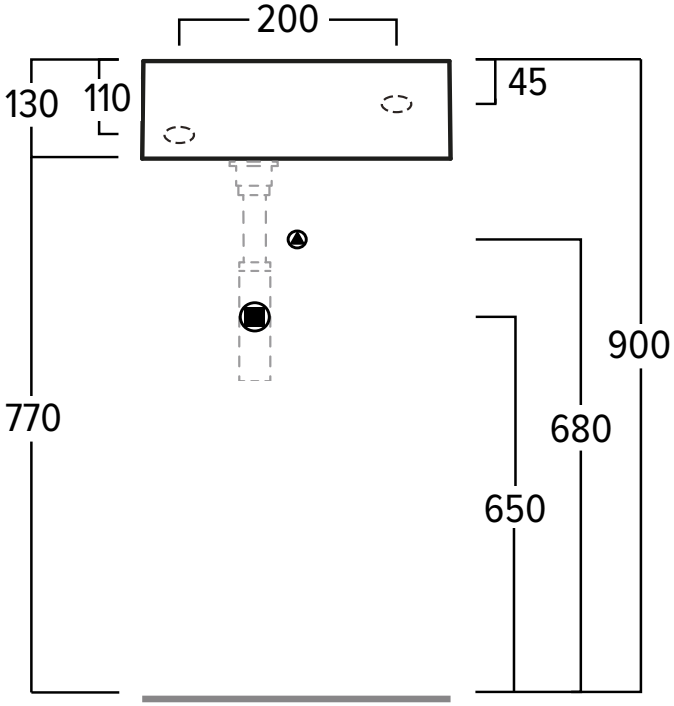

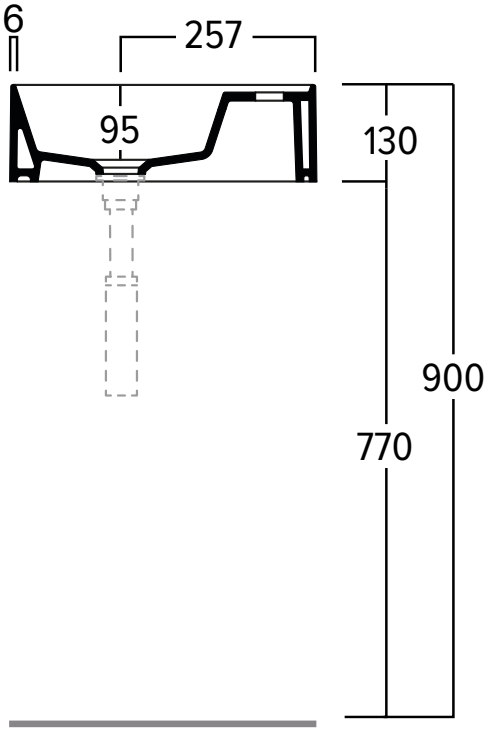

TORTU

FIJI

fountain, 27X40

TUVAG40

L 400 mm W 270 mm H 130 mm

material: ceramic

weight: 8,5 kg

tortuworld.com