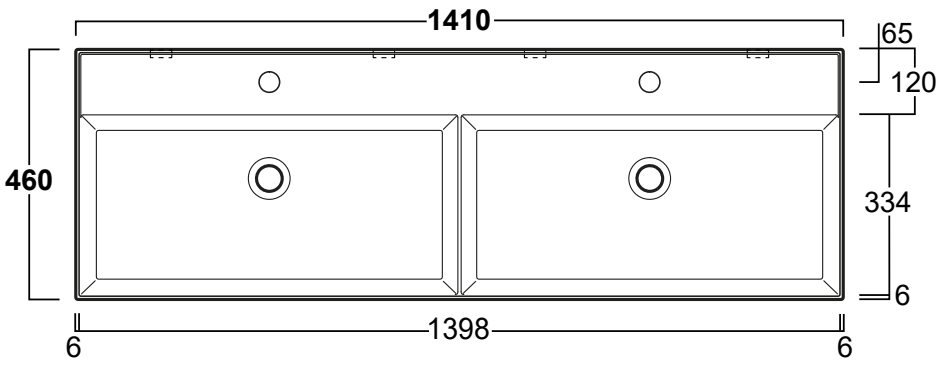

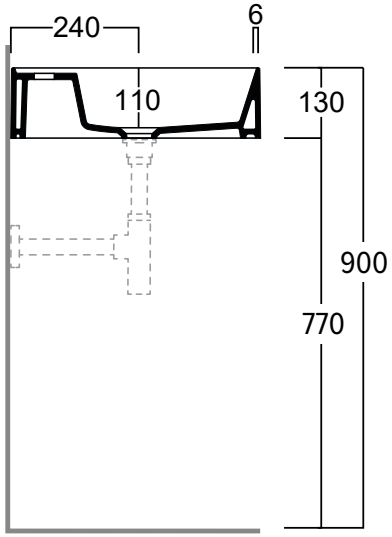

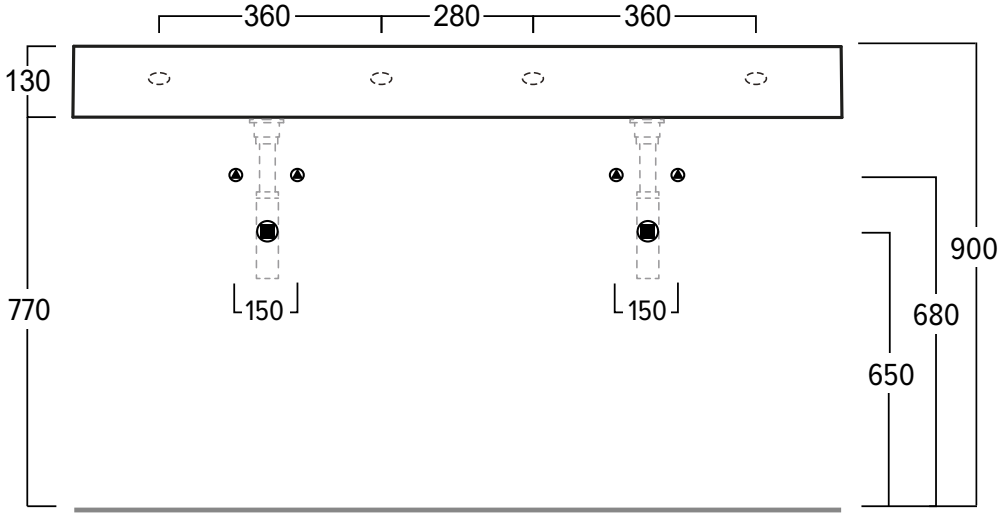

TORTU

FIJI 141 D

washbasin, double

TUVAG141D

L 1410 mm W 460 mm H 130 mm

material: ceramic

weight: 38 kg

tortuworld.com